REPUBLIC POLYTECHNIC

Lesson 15
Shortest Path and Maximum Flow Problems (I)

E211 – Operations Planning II

REPUBLIC POLYTECHNIC

E211 Topic Tree

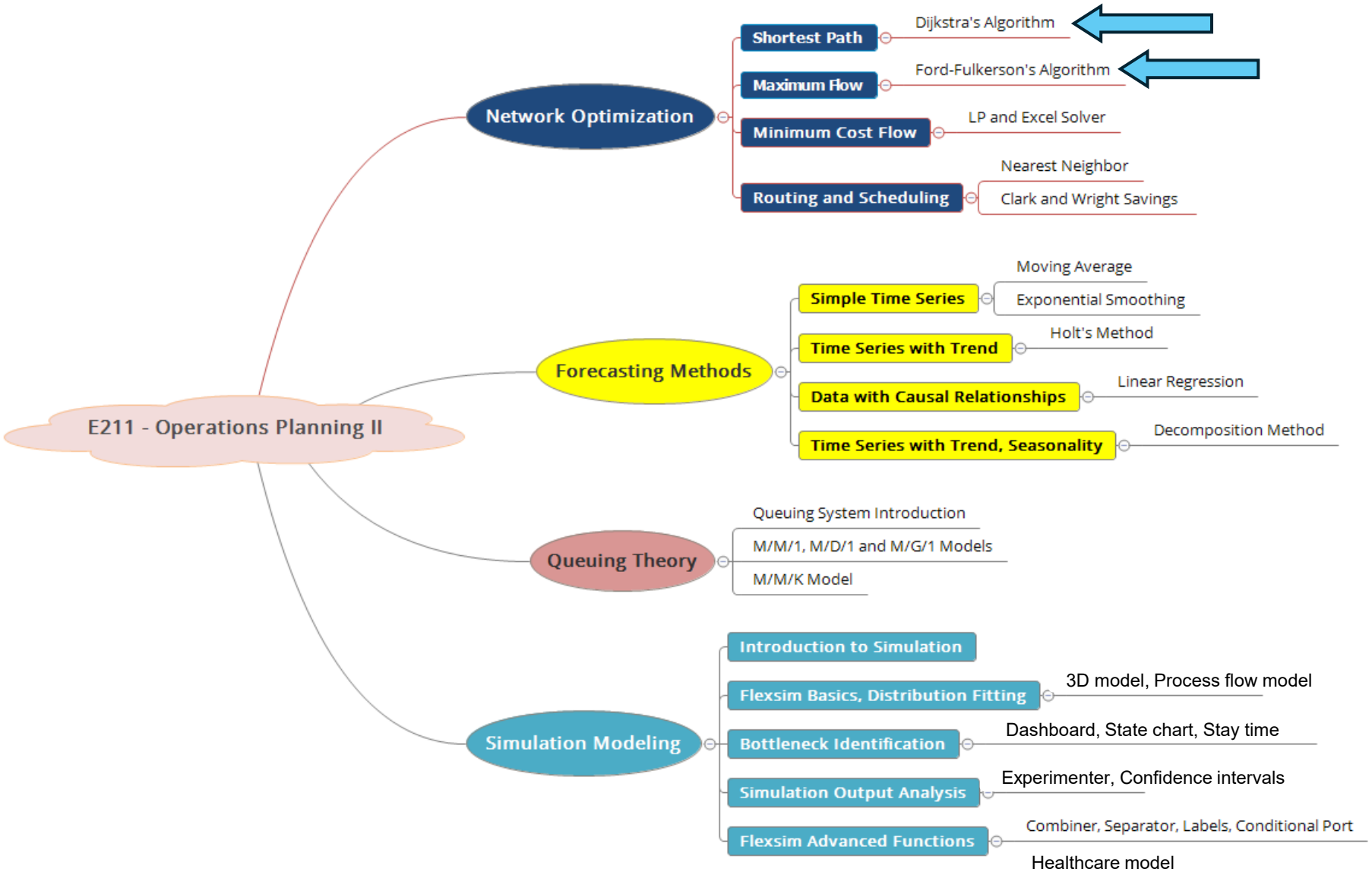

Shortest Path Problem

Shortest Path Problem

- The shortest path problem is to find the shortest distance, shortest time or minimum cost path between an origin and destination point(s).

- It is commonly found in logistics, route planning, network design, and many real-world problems where efficiency in movement or cost is essential.

- The key objective is to **minimize** the total distance, cost, or time required to reach a target point from a starting point.

Shortest Path Problem

- For example:
  - Finding the best route to go from node A to node F through a number of intermediate nodes.
  - In this case, the nodes may represent towns and the arcs represent segments of road and are weighted with distance/time/cost needed to travel that segment.
  - Shortest path is A to C to E to F with total length = 14.

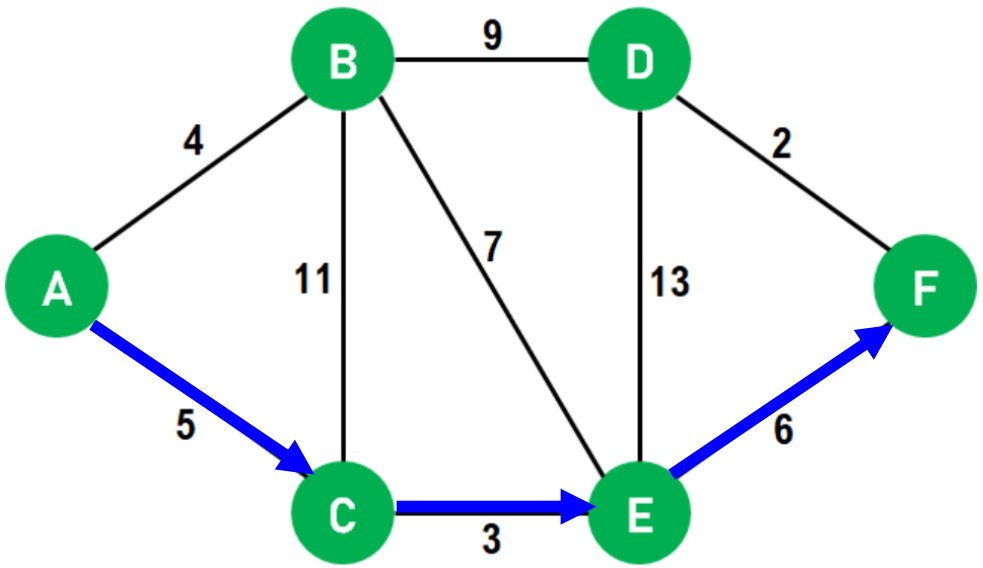

Dijkstra's Algorithm for Shortest Path Problem

- Step 1 - Put the origin into the solution set
- Step 2 - Identify the arcs originating from the origin and put the terminating node of the shortest arc into the solution set
- Step 3 - Identify the arcs originating from the nodes in the solution set and select the node closest to the origin to join the solution set
- Step 4 - Repeat step 3 until all nodes have joined the solution set

Dijkstra's Algorithm - Example

Network	Description	Solution Set	Arcs	Total Dist
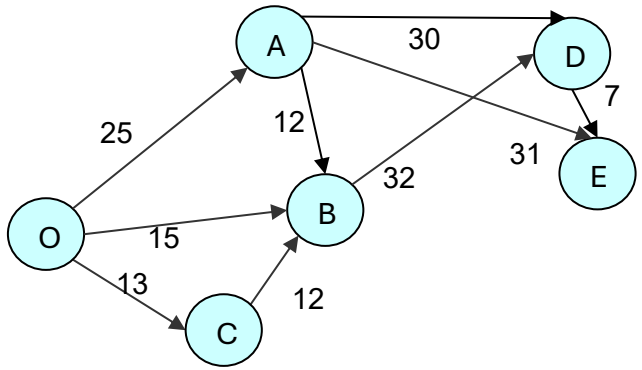	Problem: To find the shortest path from O to all other nodes. Numbers on arc can represent i.Distance between nodes ii.Time taken to travel between nodes iii.Cost to travel between nodes			
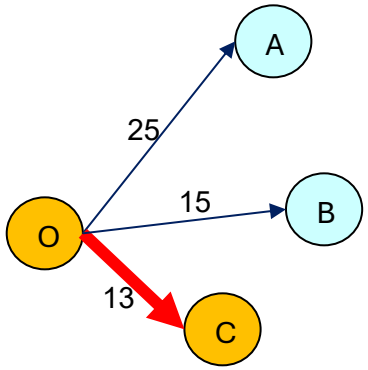	Origin O is added into solution set. Nodes A, B and C are directly connected to O. Arc OC is the shortest arc from O, add node C into the solution set, shortest distance from O to C is 13.	O	O → A O → B O → C	25 15 13

Dijkstra's Algorithm - Example

Network	Description	Solution Set	Arcs	Total Dist
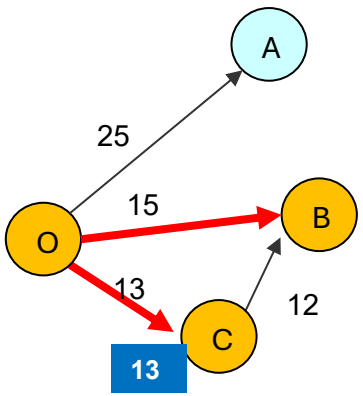	Nodes A and B are directly connected to O; node B is directly connected to C. Through arc CB, the total distance from O to B is 25 (= 13 + 12) Arc OB is the shortest arc from O, add node B into the solution set, shortest distance from O to B is 15.	O C (13)	O → A O → B C → B	25 15 25
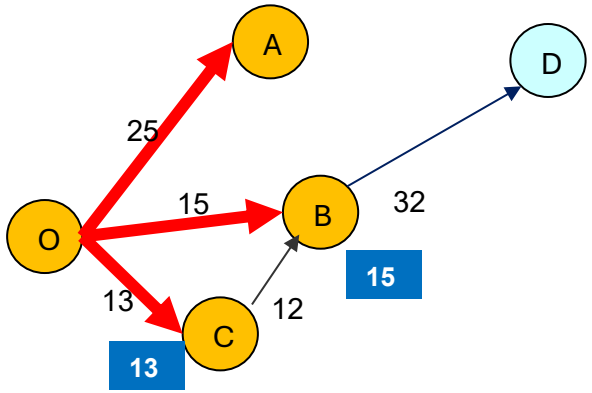	Node A is directly connected to O; node D is directly connected to B. Through arc BD, the total distance from O to D is 47 (= 15 + 32) Arc OA is the shortest arc from O, add node A into the solution set, shortest distance from O to A is 25.	O C (13) B (15)	O → A B → D	25 47

Dijkstra's Algorithm - Example

Network	Description	Solution Set	Arcs	Total Dist
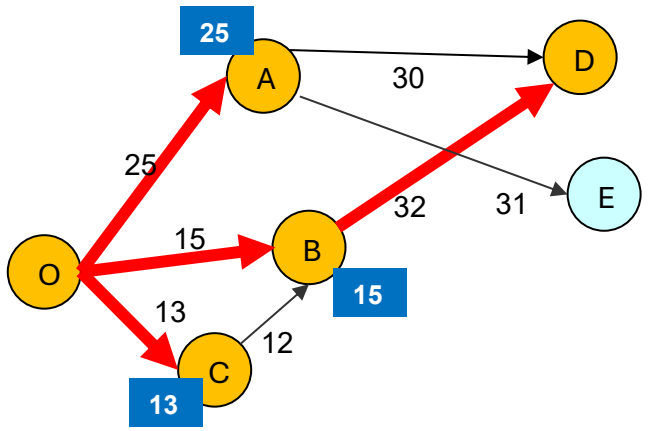	Nodes D and E are directly connected to A; node D is directly connected to B. The total distance from O to D through A is 55 (=25+30); from O to E through A is 56 (=25+31); from O to D through B is 47 (=15+32). Node D (having the shortest total distance of 47) is added to the solution set.	O C (13) B (15) A (25)	A → D A → E B → D	55 56 47
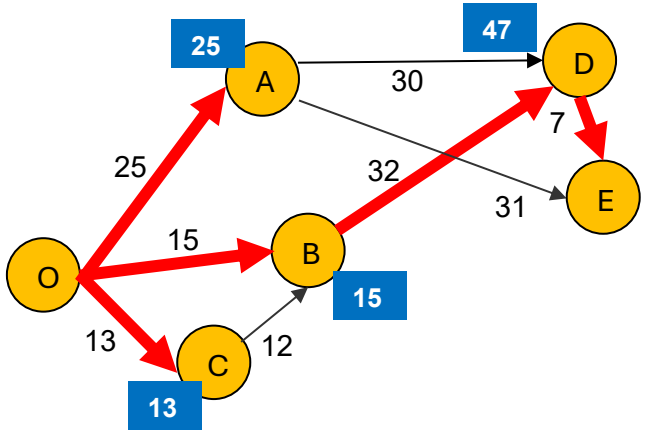	Node E is directly connected to A; node E is directly connected to D. Node E (having the shortest total distance of 54 based on the route of O→ B→ D→ E) is <u>lastly</u> added to the solution set.	O C (13) B (15) A (25) D (47) E (54)	A → E D → E	56 54

Dijkstra's Algorithm – Solution

Full solution is obtained when all nodes are added into the solution set. The optimal routes are shown by the bold red arcs

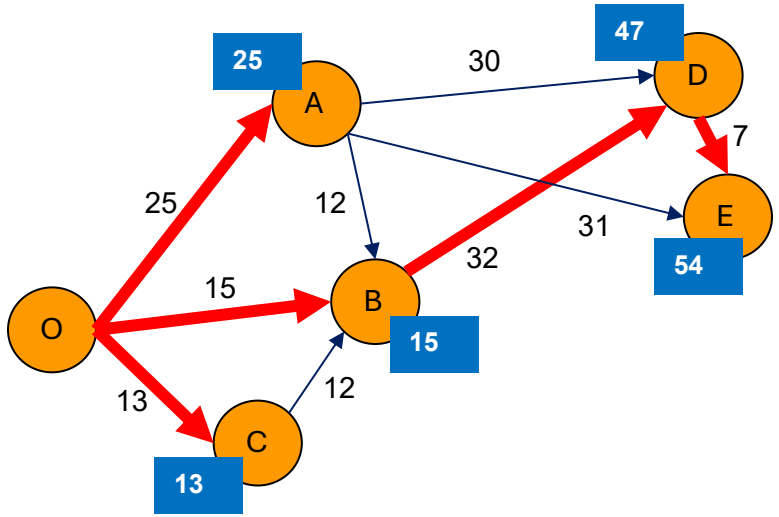

From node O to	Route	Total Dist
Node A	O → A	25
Node B	O → B	15
Node C	O → C	13
Node D	O → B → D	47
Node E	O → B → D→ E	54

Activity 1: Solve the Shortest Path Problem

A vegetables farm supplies its produce to distributors in 6 other cities as shown in the network. The travel time between the cities, in hours, is shown along each branch. Apply Dijkstra's algorithm to find the shortest time of each route from the farm to each of the 6 cities in the network.

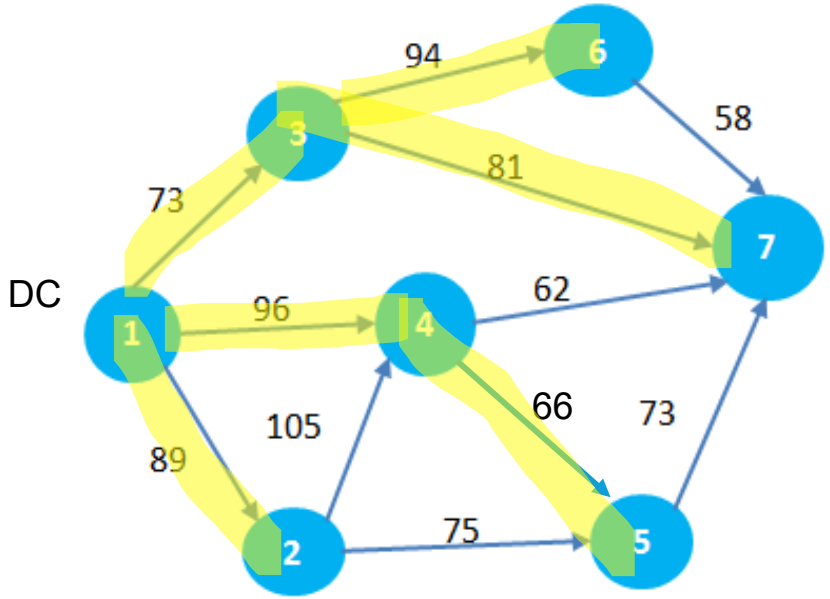

From DC to	Route	Total Time
City 2	1 → 2	89
City 3	1 → 3	73
City 4	1 → 4	96
City 5	1 → 4 → 5	162
City 6	1 → 3 → 6	167
City 7	1 → 3 → 7	154

Activity 1: Solution

A vegetables farm supplies its produce to distributors in 6 other cities as shown in the network. The travel time between the cities, in hours, is shown along each branch. Apply Dijkstra's algorithm to find the shortest time of each route from the farm to each of the 6 cities in the network.

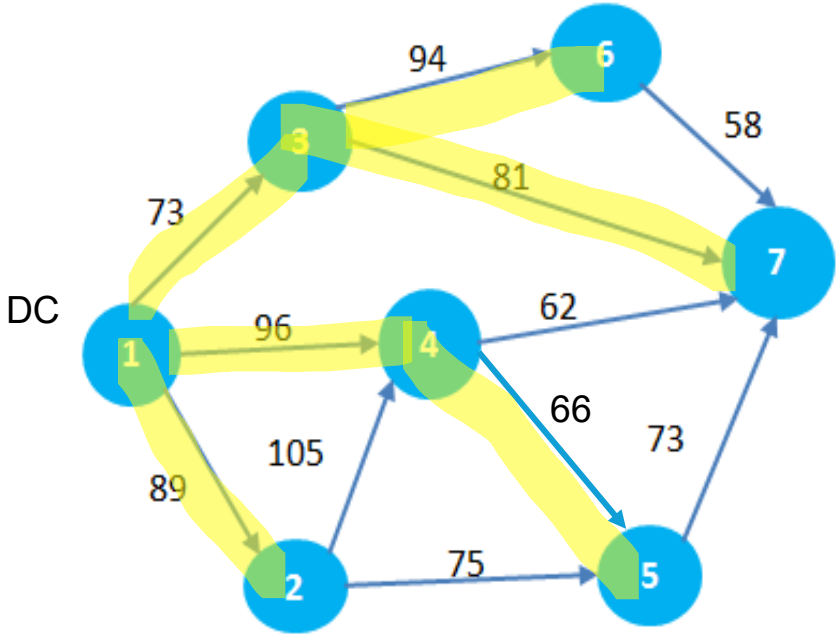

From DC to	Route	Total Time
City 2	1 → 2	89
City 3	1 → 3	73
City 4	1 → 4	96
City 5	1 → 4 → 5	162
City 6	1 → 3 → 6	167
City 7	1 → 3 → 7	154

Maximum Flow Problem

Maximum Flow Problem

- The maximum flow problem is to find the maximum possible flow from an origin to a destination where the arcs of the network have limited flow capacities.
- Applications include supply chain optimization, design of fluid flow systems and communication network and transportation planning.
- The key objective is to **maximize** the amount of flow that can travel from the source to the sink, considering capacity limits on each path within the network
- Can you figure out that the Maximum Flow of the network (from 0 to 5) is 23?

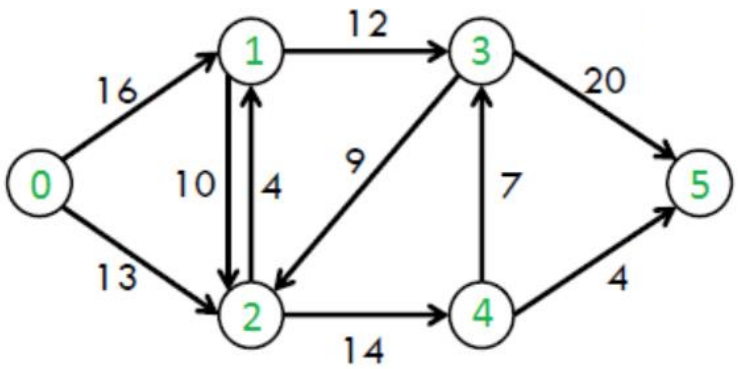

Maximum Flow Problem

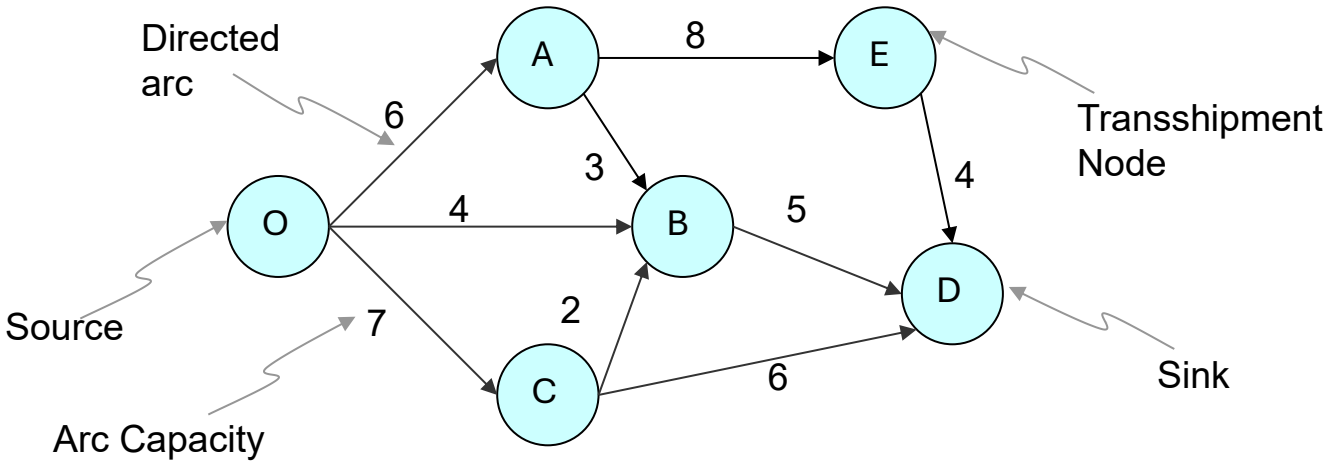

- All flow through a directed and connected network originates at one node, called the source, and terminates at one other node, called the sink.
- All the remaining nodes are transshipment nodes.
- Flow through an arc is allowed only in the direction indicated by the arrowhead, where the maximum amount of flow is given by the capacity of that arc.

Ford-Fulkerson's Algorithm for Maximum Flow Problem

- Step 1 – Change each directed arc in the original network into an undirected arc. Arc capacity in the original direction remains the same; arc capacity in the opposite direction is set to be zero.
- Step 2 - Choose one path through the network from origin to destination.
- Step 3 - Determine the maximum flow that can pass through the path (maximum flow is the **minimum** of all the flow capacities of the arcs along the path)
- Step 4 - Adjust the capacities of the arcs along the path by subtracting the maximum flow determined in step 3
- Step 5 - Adjust the capacities of the arcs in the opposite direction by adding the maximum flow
- Step 6 - Repeat steps 2 to 5 until there are no more paths with available flow

Ford-Fulkerson's Algorithm - Example

Network	Description
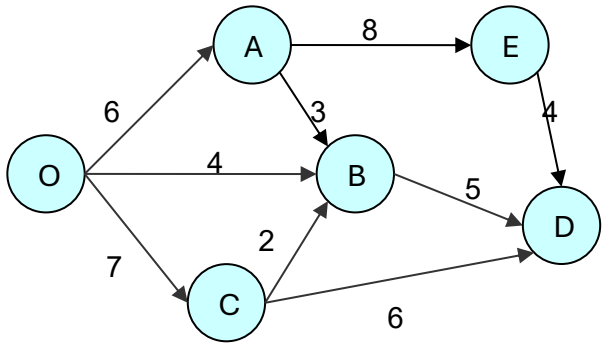	Problem: Find the maximum flow of items from the origin, O, to the destination, D, based on the limited capacities as shown by the number along the arcs.
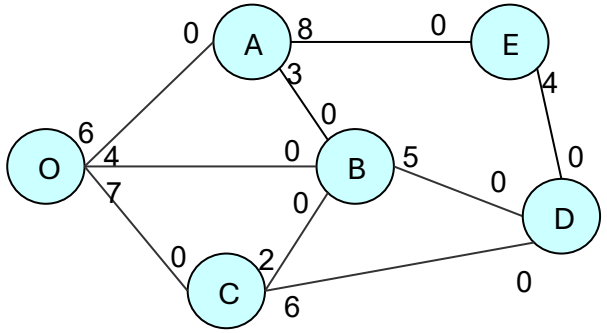	Start by splitting the arc capacities for either direction of flow on the arc. 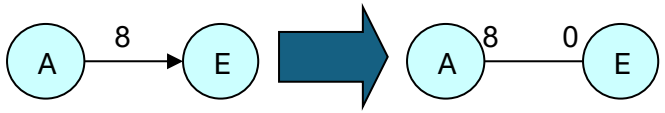 Max. flow from A to E is 8, and from E to A is 0

Ford-Fulkerson's Algorithm - Example

Network	Description
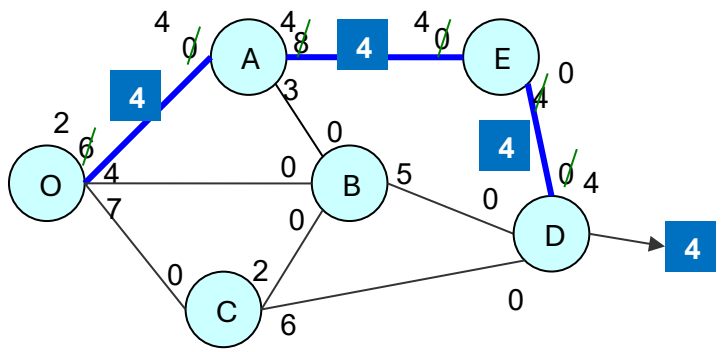	- Path O → A → E → D is arbitrarily chosen. - Maximum flow that can pass through this path is 4, which is the min {6, 8, 4} - Subtract 4 from each of the arc capacities on path towards D - Add 4 to the arc capacities in the opposite direction
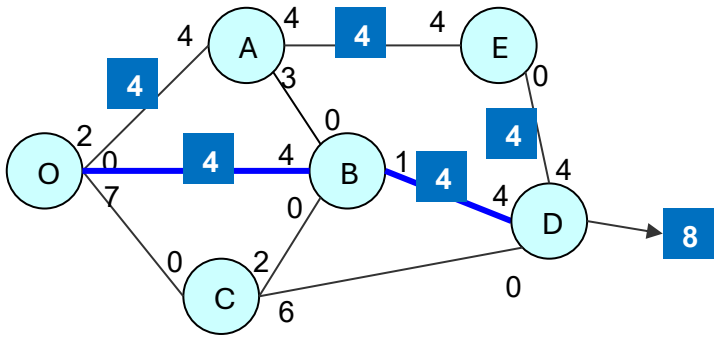	- Choose another path, O → B → D - Maximum flow along this path is 4 - Adjust arc capacities accordingly - Total units that can be shipped through network is 8 Route: O → A → E → D, Flow Quantity: 4 Route: O → B → D, Flow Quantity: 4

Ford-Fulkerson's Algorithm - Example

Network	Description
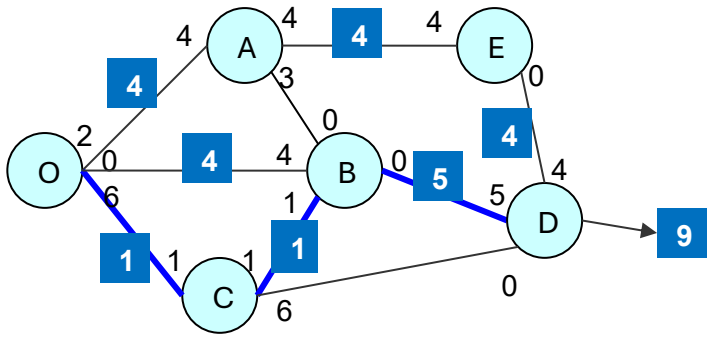	- Choose another path, O → C → B → D - Maximum flow along this path is 1 - Adjust arc capacities accordingly - Total units that can be shipped through network is 9

Route	Flow Quantity
O → A → E → D	4
O → B → D	4
O → C → B → D	1

Network	Description
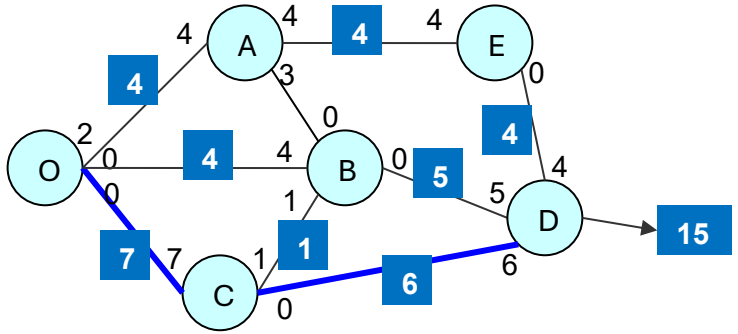	- Choose another path, O → C → D - Maximum flow along this path is 6 - Adjust arc capacities accordingly - Total units that can be shipped through network is 15

Ford-Fulkerson's Algorithm – Solution

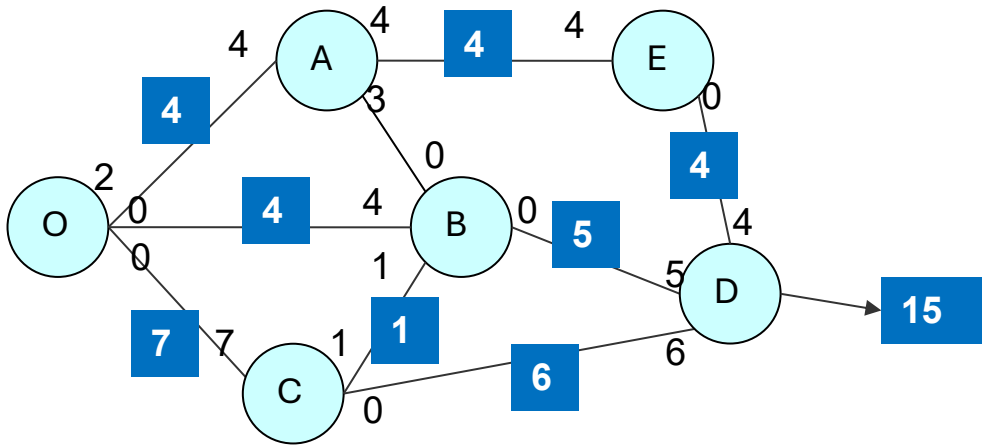

Route	Flow Quantity
O → A → E → D	4
O → B → D	4
O → C → B → D	1
O → C → D	6
Total	15

Activity 2: Solve the Maximum Flow Problem

The following network diagram shows the maximum number of truckloads that can be transported along each road that directly connects two towns without any intermediate towns. What is the maximum number of truckloads that can be sent from the origin (O) to the destination (E)? Apply Ford-Fulkerson's algorithm.

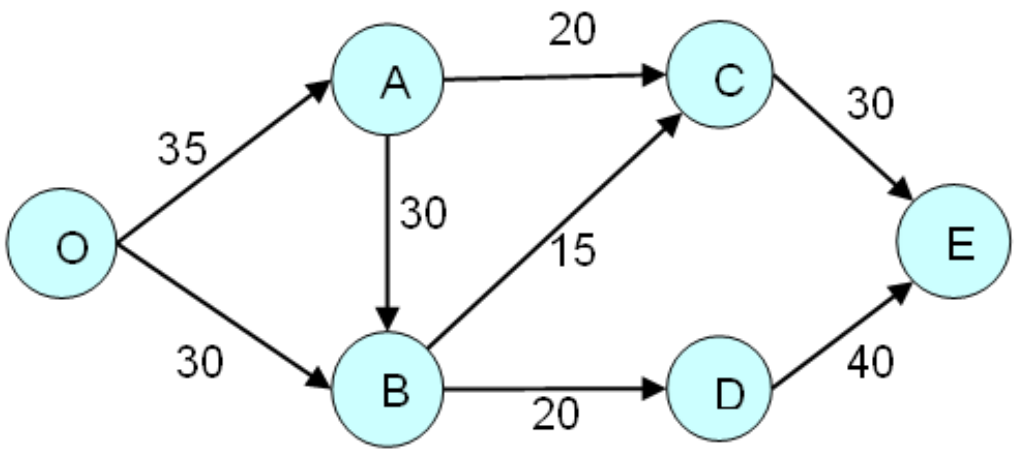

Route	Flow Quantity
Total	

Activity 2: Solution

The following network diagram shows the maximum number of truckloads that can be transported along each road that directly connects two towns without any intermediate towns. What is the maximum number of truckloads that can be sent from the origin (O) to the destination (E)? Apply Ford-Fulkerson's algorithm.

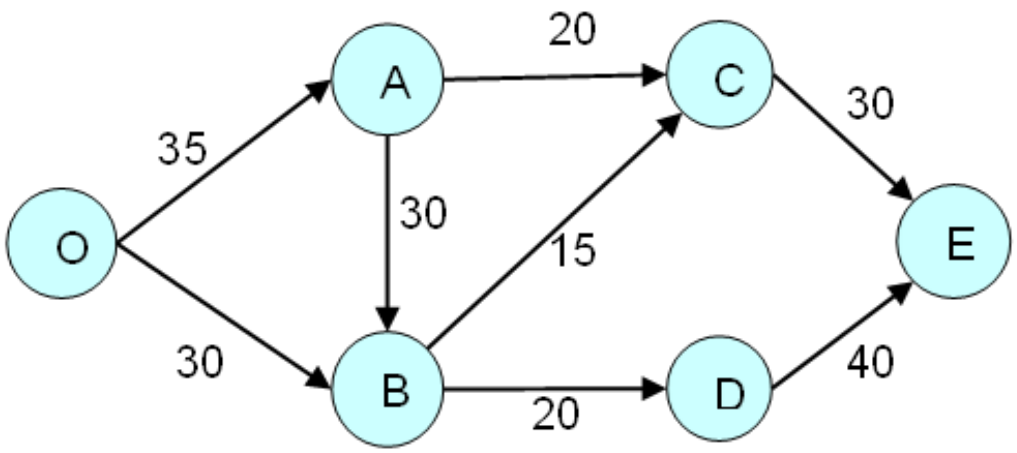

Route	Flow Quantity
O – A – C – E	20
O – B – D – E	20
O – A – B – C – E	10
Total	50

Learning Outcomes

At the end of the lesson, students should be able to:

- Identify a Shortest Path problem
- Apply Dijkstra's Algorithm to solve a Shortest Path problem
- Identify a Maximum Flow problem
- Apply Ford-Fulkerson's Algorithm to solve a Maximum Flow problem
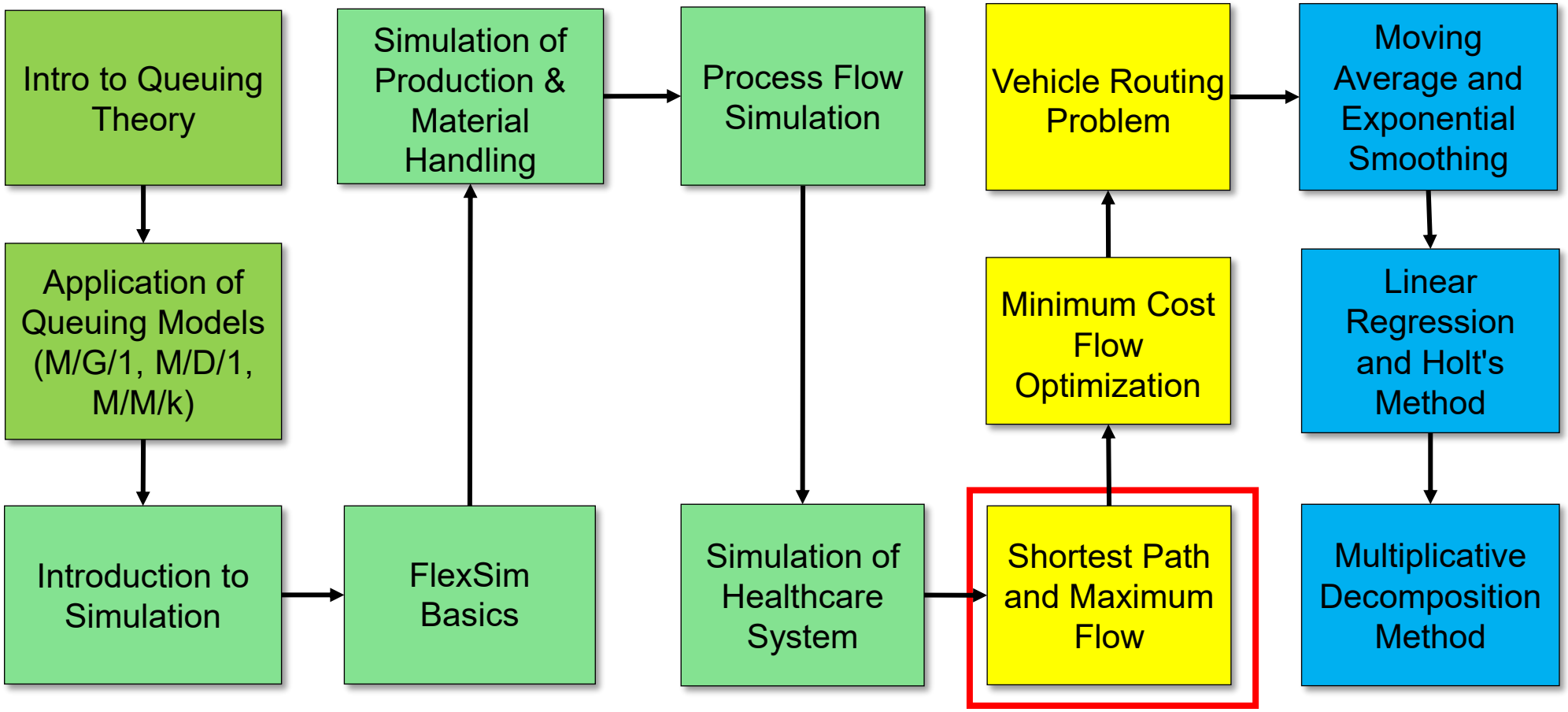
E211 Progression